THIS COPY IS PROVIDED ON A RESTRICTED BASIS AND IS NOT TO BE USED IN ANY WAY DETRIMENTAL TO THE INTERESTS OF PANDUIT CORP.

PANDUIT PART NUMBER	STUD SIZE	DIMENSIONS in.				
		A ±.020	W ±.010	C ±.015	M ±.020	H ±.010
PV2-10RX	#10	1.94 (49.28)	.68 (17.27)	.58 (14.73)	1.60 (40.64)	.20 (5.08)
PV2-14RX	1/4"	1.94 (49.28)	.68 (17.27)	.58 (14.73)	1.60 (40.64)	.27 (6.86)
PV2-56RX	5/16"	1.94 (49.28)	.68 (17.27)	.58 (14.73)	1.60 (40.64)	.33 (8.38)
PV2-38RX	3/8"	1.94 (49.28)	.68 (17.27)	.58 (14.73)	1.60 (40.64)	.39 (9.91)
PV2-12RX	1/2"	2.03 (51.56)	.86 (21.84)	.58 (14.73)	1.60 (40.64)	.52 (13.21)

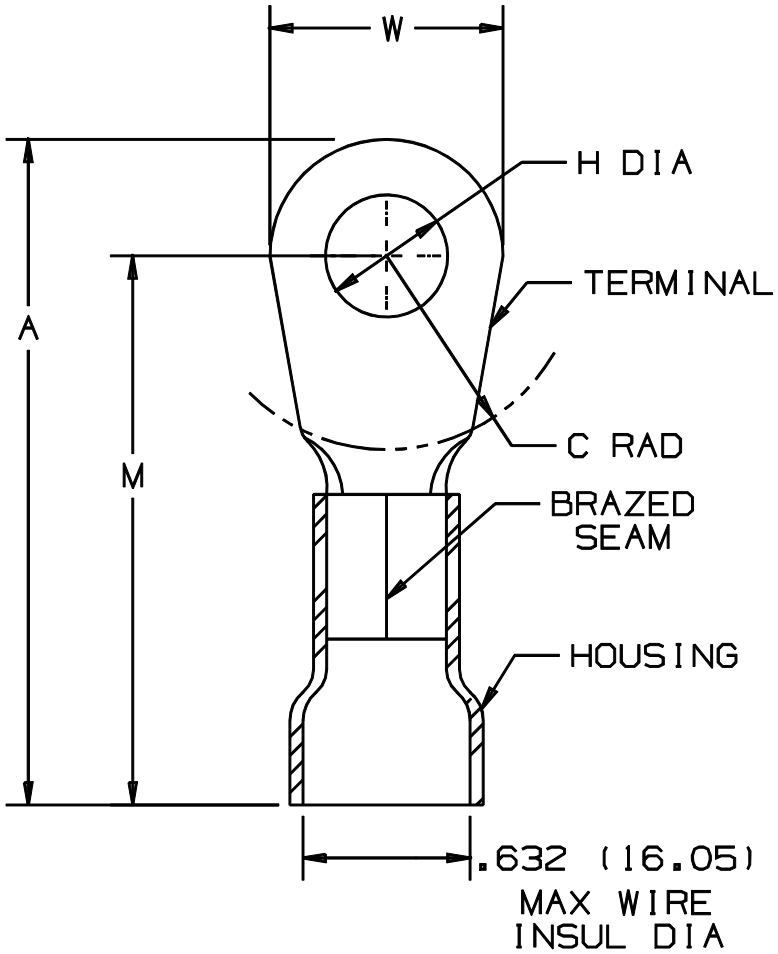

NOTES:

1. UL LISTED FOR:
   A. 600V MAX VOLTAGE RATING
   B. 221° F (105° C) MAX TEMP RATING
   C. #2 AWG STRANDED COPPER WIRE
2. PACKAGE QTY: STD. PKG. 10
   BULK PKG. 200
3. MATERIAL:
   A. STAMPING - .060" (15.2) THK COPPER, TIN PLATED
   B. HOUSING - VINYL, RED
4. DIMENSIONS IN BRACKETS ARE IN MILLIMETERS
5. INSTALLATION TOOL: CT-720

UL LISTED 20H3 E76522

A41220_03

REV	DATE	BY	CHK	DESCRIPTION	ECN#	QA	CUST	PM
03	1/01	RM		FILESPEC WAS A41220A:1L1				
2	7-88	DW		REDRAWN WITH REVISIONS				

PANDUIT CORP. TINLEY PARK, ILLINOIS

#2 BARREL VINYL INSULATED RING TONGUE .632 (16.05) MAX. WIRE INSUL. DIAMETER

DRAWN BY	CHK'D	SCALE	DRAWING NO.
DAW		NONE	A41220